BROAN®

SPECIFICATION SHEET

EVOLUTION™ 2 RANGE HOOD QP2 SERIES

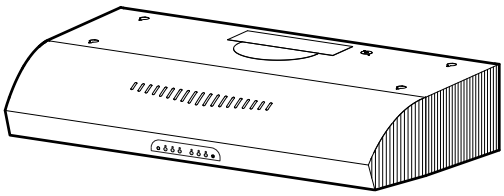

Meeting customer demands for a contemporary styled range hood that is easy to clean, and brightly lights the cooktop.

FEATURES

- Clean, sleek appearance
- Durable, powder-coat paint or brushed stainless steel
- Non-stick bottom pan for easy cleaning
- Large, full filter design, with antimicrobial coating that inhibits the formation of odor-producing bacteria and protects filter from discoloration - dishwasher-safe for easy cleaning
- 3-level blower speed control: normal / mid / high
- Four halogen lights provide focused lighting for unmatched cooktop visibility (lamps included)
- 3-level "theater-style" lighting adjustment
- Centrifugal blower provides increased performance and quieter operation
- Broan advanced Heat Sentry - automatically turns blower on to high (when off) or higher (when excess cooking heat is detected)
- Versatile design allows for 3¼" x 10", 7" round, or non-ducted discharges without re-positioning blower
- Adjustable duct connectors - accommodate off-center ductwork
- CleanSense™ charcoal filters change color when replacement is necessary (for non-ducted installations - purchase separately)
- 30", 36" or 42" widths in White, Black, Bisque, and Stainless Steel
- Tri-lingual carton markings and installation manual (English/ French/Spanish)
- For indoor use only

SPECIFICATIONS

Volts	120
Hz	60
Amps	2.8
CFM	100 (normal), 350 (high)
Sones	0.6 (normal), 5.0 (high)
Controls	3-speed electronic pushbutton
Halogen Flood Light	50W, MR16 with GU10 base †
Charcoal Filter BPPF42 (42") ‡	BPPF30 (30"), BPPF36 (36"),

† 4 bulbs req. (included).
‡ Purchase separately for non-ducted installation.

TYPICAL SPECIFICATION

Range hood shall be Broan QP2 Evolution Series.

Unit will have clean, contoured appearance with no sharp edges. Finish to be baked-on powder-coat paint or brushed stainless steel. It must have a fully-enclosed bottom and dishwasher-safe, full filters.

Hood to be convertible between 3¼" x 10" and 7" round ducted (using washable aluminum filters) as well as non-ducted (using CleanSense™ filters - must be purchased separately). Duct connectors must be adjustable to accommodate off-center ductwork.

Range hood to have a centrifugal blower and four, 50-watt (max.) halogen flood lights (bulbs included). Blower and lights shall be operated using a specially-designed, 3-level electronic pushbutton control.

Air delivery shall be no less than 100 cfm (normal) or 350 cfm (maximum) and sound level no greater than 0.6 Sones (normal) or 5.0 Sones (high). Air and sound ratings to be certified by HVI. Unit shall be U.L. and CU.L. listed.

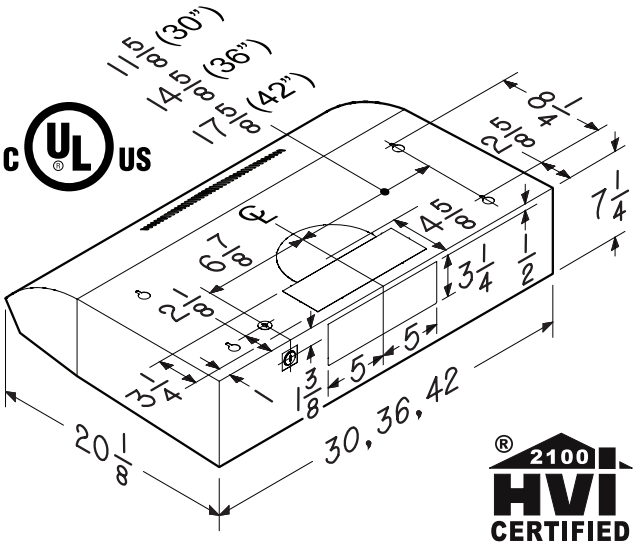

HVI-2100 CERTIFIED RATINGS comply with new testing technologies and procedures prescribed by the Home Ventilating Institute, for off-the-shelf products, as they are available to consumers. Product performance is rated at 0.1 in. static pressure, based on tests conducted in a state-of-the-art test laboratory. Sones are a measure of humanly-perceived loudness, based on laboratory measurements.

Broan-NuTone LLC Hartford, Wisconsin www.broan.com 800-558-1711
Broan-NuTone Canada Mississauga, Ontario www.broan.ca 877-896-1119

REFERENCE	QTY.	REMARKS	Project
			Location
			Architect
			Engineer
			Contractor
			Submitted by Date