WEIL-McLAIN Ultra

Ultra Gas-fired water boiler

Vent Supplement

Concentric vent/air system: Through-roof termination

(Weil-McLain kit part number 383-500-350)

[All piping (air and vent) must be PVC only]

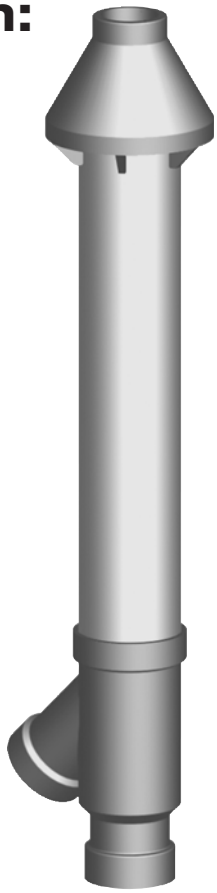

Ultra with PhD Precision Hydronic Data technology

CERTIFIED

DESIGN CERTIFIED

WARNING This document must only be used by a qualified heating installer/service technician. Read all instructions, including this Supplement and the Boiler Manual, before installing. Perform steps in the order given. Failure to comply could result in severe personal injury, death or substantial property damage.

NOTICE Installation must comply with local requirements and with the National Fuel Gas Code, ANSI Z223.1 for U.S. installations or CSA B149.1 or B149.2 for Canadian installations.

Part No. 550-141-965/0703

Contents

Please read before proceeding 2
Vent and air piping materials 3
Prepare boiler location 4
Concentric termination location 6
Assembling concentric vent/air kit 8
Installing vent & air piping 10

Please read before proceeding

WARNING These instructions are for installation of vent and air piping for Weil-McLain Ultra boilers, using Weil-McLain concentric vent termination kit, part number 383-500-350. Do not apply these instructions or the kit components to any other boiler or appliance. Failure to comply could result in personal injury or death.

Installer

WARNING Read all instructions before installing. Follow all instructions in proper order to prevent personal injury or death.

- This document is intended only as a supplement to the Ultra Boiler Manual. It's purpose is for the installation of vent and air piping for the boiler.

User

- This document is for use only by your qualified heating installer/service technician.
- Please refer to the User's Information Manual for your reference.
- Keep this supplement near the boiler for use by your installer or technician.

WARNING **All Ultra boilers must be installed as direct vent. This requires piping installation for both flue products (vent) and combustion air (air piping). All vent and air piping must be installed, terminated and sealed as described in this supplement. Failure to adhere to the guidelines in this supplement can result in severe personal injury, death or substantial property damage.**

Hazard definitions

The following defined terms are used throughout this manual to bring attention to the presence of hazards of various risk levels or to important information concerning the life of the product.

DANGER Indicates presence of hazards that will cause severe personal injury, death or substantial property damage.

WARNING Indicates presence of hazards that can cause severe personal injury, death or substantial property damage.

CAUTION Indicates presence of hazards that will or can cause minor personal injury or property damage.

NOTICE Indicates special instructions on installation, operation or maintenance that are important but not related to personal injury or property damage.

1 Vent and air piping materials

WARNING Use only the materials listed in the table below (PVC pipe and PVC cement only) for vent and air pipe and fittings. Install the concentric vent termination kit as described in this supplement. Failure to comply could result in severe personal injury, death or substantial property damage.

NOTICE Installation must comply with local requirements and with the National Fuel Gas Code, ANSI Z223.1 for U.S. installations or CSA B149.1 or B149.2 for Canadian installations.

WARNING DO NOT attempt to modify kit components. DO NOT extend or cut the inner or outer PVC pipe sections provided with the kit. Install the kit as supplied, without alteration. Failure to comply could result in severe personal injury, death or substantial property damage.

All combustion air and vent pipe materials and fittings must comply with the following:

Concentric termination kit	Kit components: Y-Fitting Rain cap 2½" inner (vent) pipe 4" outer (air) pipe	Kit part number **383-500-350**
Pipe cement for kit assembly	Use ONLY PVC cement	For U. S., must comply with ANSI/ASTM D2564. For Canada, must be CSA or ULC certified

Other items:	**Material**	**Standards for installations in:**	
		United States	**Canada**
Vent or air pipe and fittings	PVC schedule 40	ANSI/ASTM D1785	CSA or ULC certified only
	PVC-DWV	ANSI/ASTM D2665	
Pipe cement/primer	PVC	ANSI/ASTM D2564	
NOTICE: DO NOT USE CELLULAR CORE PIPE			

2 Prepare boiler location

When removing a boiler from existing vent

DANGER Do not install the Ultra into a common vent with any other appliance. This will cause flue gas spillage or appliance malfunction, resulting in possible severe personal injury, death or substantial property damage.

WARNING Failure to follow all instructions can result in flue gas spillage and carbon monoxide emissions, causing severe personal injury or death.

When removing existing boiler from existing common vent system:

At the time of removal of an existing boiler, the following steps shall be followed with each appliance remaining connected to the common venting system placed in operation, while the other appliances remaining connected to the common venting system are not in operation.

a. Seal any unused openings in the common venting system.

b. Visually inspect the venting system for proper size and horizontal pitch and determine there is no blockage or restriction, leakage, corrosion or other deficiencies which could cause an unsafe condition.

c. Test vent system — Insofar as is practical, close all building doors and windows and all doors between the space in which the appliances remaining connected to the common venting system are located and other spaces of the building. Turn on clothes dryers and any appliance not connected to the common venting system. Turn on any exhaust fans, such as range hoods and bathroom exhausts, so they will operate at maximum speed. Do not operate a summer exhaust fan. Close fireplace dampers.

d. Place in operation the appliance being inspected. Follow the lighting instructions. Adjust thermostat so appliance will operate continuously.

e. Test for spillage at draft hood relief opening after 5 minutes of main burner operation. Use the flame of a match or candle, or smoke from a cigarette, cigar, or pipe.

f. After it has been determined that each appliance remaining connected to the common venting system properly vents when tested as outlined herein, return doors, windows, exhaust fans, fireplace dampers, and any other gas-burning appliance to their previous conditions of use.

Any improper operation of common venting system should be corrected so the installation conforms with the National Fuel Gas Code, ANSI Z223.1 — latest edition. Correct by resizing to approach the minimum size as determined using the appropriate tables in Part 11 of that code. Canadian installations must comply with B149.1 or B149.2 Installation Code.

Vent and air piping

Vent and air system

NOTICE Installation must comply with local requirements and with the National Fuel Gas Code, ANSI Z223.1 for U.S. installations or CSA B149.1 or B149.2 for Canadian installations.

The Ultra boiler requires a special vent system, designed for pressurized venting. Ultra boilers are rated ANSI Z21.13 Category IV (pressurized vent, likely to condense in the vent).

You must also install air piping from outside to the boiler air intake adapter. The resultant installation is categorized as direct vent (sealed combustion).

You may use any of the vent/air piping methods covered in this supplement or other Ultra venting supplements. Do not attempt to install the Ultra boiler using any other means. This supplement covers only vertical vent/air termination, using the Weil-McLain concentric termination assembly.

WARNING **DO NOT** mix components from different systems. The vent system could fail, causing leakage of flue products into the living space. Use only PVC pipe and fittings for all vent and air piping and fittings, with primer and cement specifically designed for the PVC.

Concentric termination installation

The Ultra boiler concentric vent system can only be terminated vertically (not intended for sidewall termination). The maximum vent/air piping length depends on boiler size. Refer to the information in this supplement to determine acceptable vent and air piping length.

Combustion air for the Ultra boiler must be ducted directly to the boiler from outside (direct vent installation).

Follow all instructions in this document and the Ultra Boiler Manual to install vent and air piping.

2 Prepare boiler location *(continued)*

Air contamination

Pool and laundry products and common household and hobby products often contain fluorine or chlorine compounds. When these chemicals pass through the boiler, they can form strong acids. The acid can eat through the boiler wall, causing serious damage and presenting a possible threat of flue gas spillage or boiler water leakage into the building.

Please read the information given in Table 1, listing contaminants and areas likely to contain them. If contaminating chemicals will be present near the location of the boiler combustion air inlet, have your installer pipe the boiler combustion air and vent to another location, per the Boiler Manual and Vent Supplement.

WARNING If the boiler combustion air inlet is located in any area likely to cause air contamination, or if products which would contaminate the air cannot be removed, you must have the combustion air and vent repiped and terminated to another location. Contaminated combustion air will damage the boiler heat exchanger, resulting in possible severe personal injury, death or substantial property damage.

Do not operate an Ultra boiler if the boiler combustion air inlet is located in a laundry room or pool facility, for example. These areas will always contain hazardous contaminants.

WARNING To prevent the potential of severe personal injury or death, check for areas and products listed in Table 1 before installing the boiler or air inlet piping.

If contaminants are found, you MUST:

- Remove products permanently. — OR —
- Relocate air inlet and vent terminations to other areas.

Table 1 Corrosive contaminants

Products to avoid
Spray cans containing chloro/fluorocarbons
Permanent wave solutions
Chlorinated waxes/cleaners
Chlorine-based swimming pool chemicals
Calcium chloride used for thawing
Sodium chloride used for water softening
Refrigerant leaks
Paint or varnish removers
Hydrochloric acid/muriatic acid
Cements and glues
Antistatic fabric softeners used in clothes dryers
Chlorine-type bleaches, detergents, and cleaning solvents found in household laundry rooms
Adhesives used to fasten building products and other similar products
Areas likely to have contaminants
Dry cleaning/laundry areas and establishments
Swimming pools
Metal fabrication plants
Beauty shops
Refrigeration repair shops
Photo processing plants
Auto body shops
Plastic manufacturing plants
Furniture refinishing areas and establishments
New building construction
Remodeling areas
Garages with workshops

3 Concentric termination location

WARNING Follow instructions below when determining vent location to avoid possibility of severe personal injury, death or substantial property damage.

NOTICE Installation must comply with local requirements and with the National Fuel Gas Code, ANSI Z223.1 for U.S. installations or CSA B149.1 or B149.2 for Canadian installations.

Determine location

Locate the concentric vent/air termination using the following guidelines:

1. The total length of piping for vent or air must not exceed the limits given in Table 2, page 11.
2. The concentric vent/air assembly must terminate as shown in Figure 1.
3. The vent and air piping connected to the termination assembly must comply with the instructions in this supplement.
4. You must consider the surroundings when terminating the vent and air:
   a. Position the termination where vent vapors will not damage nearby shrubs, plants or air conditioning equipment or be objectionable.
   b. The flue products will form a noticeable plume as they condense in cold air. Avoid areas where the plume could obstruct window views.
   c. Prevailing winds could cause freezing of condensate and water/ice buildup where flue products impinge on building surfaces or plants.
   d. Avoid possibility of accidental contact of flue products with people or pets.
   e. Do not locate the termination where wind eddies could affect performance or cause recirculation, such as inside building corners, near adjacent buildings or surfaces, window wells, stairwells, alcoves, courtyards or other recessed areas.
   f. Locate or guard vent outlet to prevent condensate damage to exterior finishes.
5. Maintain clearances to termination as given below:
   a. Vent outlet must be located:
      - At least 6 feet from adjacent walls.
      - No closer than 5 feet below roof overhang.
      - At least 7 feet above any public walkway.
      - At lease 3 feet above any forced air intake within 10 feet.
      - No closer than 12 inches below or horizontally from any door or window or any other gravity air inlet.
   b. Air inlet must terminate at least 12" above the roof or snow line as shown in Figure 1. (For Canada, the minimum is 18 inches.)
   c. Do not terminate closer to 4 feet horizontally from any electric meter, gas meter, regulator, relief valve or other equipment. Never terminate above or below any of these within 4 feet horizontally.
6. Locate termination so it is not likely to be damaged by foreign objects, such as stones or balls, or subject to buildup of leaves or sediment.
7. Do not connect any other appliance to the vent pipe or multiple boilers to a common vent pipe.

Figure 1 Concentric termination placement

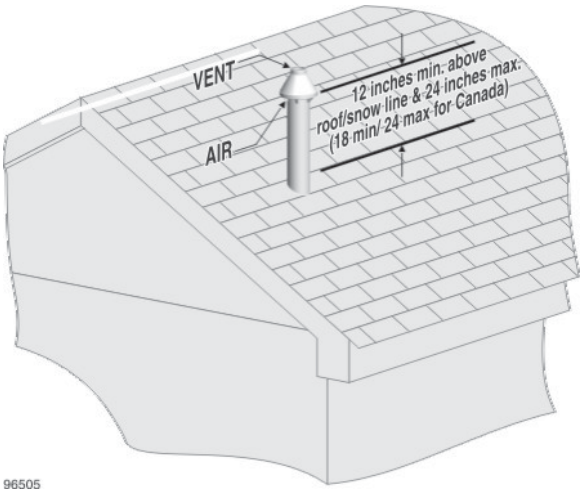

Prepare roof penetration

1. Roof penetration hole:
   a. Cut a 5-inch diameter hole to clear the 4½" termination outside diameter.
   b. Insert a galvanized metal thimble in the vent pipe hole.
2. Follow all local codes for isolation of vent pipe when passing through floors, ceilings and roofs.
3. Provide flashing and sealing boots sized for the concentric termination outside diameter, 4½ inches.
4. Mount the termination as shown in Figure 2, with no changes to any termination component.

3 Concentric termination location *(continued)*

Vent termination support

1. Do not alter any component of the concentric vent/air termination assembly. Assemble and install all components as supplied.
2. Support the concentric vent/air termination at the roof penetration as shown in Figure 2.
   - The supports/bracing used must support the termination assembly to prevent vertical slippage or sideways movement.
   - The clamps used on the outside of the termination pipe must not cut into the pipe or contain sharp edges that could cause a crack to form.

Figure 2 Termination supports

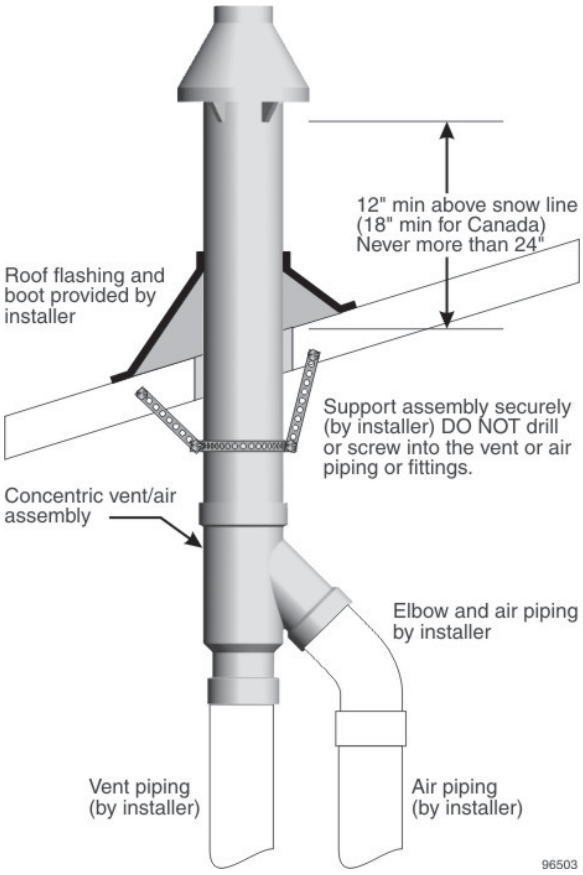

Multiple vent/air terminations

1. When terminating multiple Ultra boilers, install the concentric vent/air termination assemblies as described in this supplement.

WARNING All vent outlets must terminate at the same height to avoid possibility of severe personal injury, death or substantial property damage.

2. Place roof penetrations to obtain minimum of 12 inches between centers of adjacent vent pipe of another boiler for U. S. installations (see Figure 3). For Canadian installations, provide clearances required by CSA B149.1 or B149.2 Installation Code.
3. The air inlet of an Ultra boiler is part of a direct vent connection. It is not classified as a forced air intake with regard to spacing from adjacent boiler vents.

Figure 3 Multiple terminations

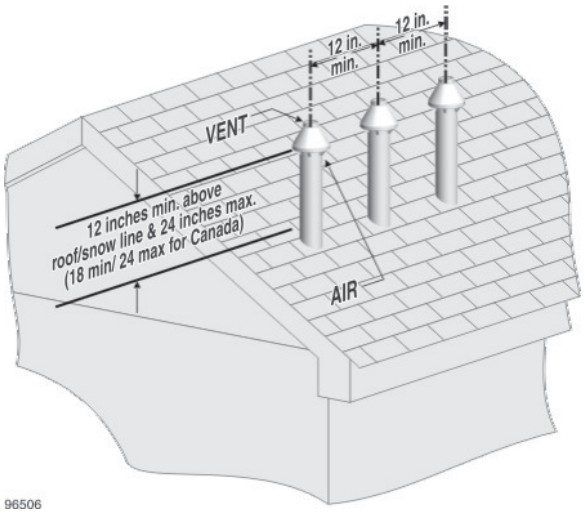

4 Assembling concentric vent/air kit

Assembling the termination

1. See Figure 4 for the dimensions and details of the termination assembly.
2. Prepare the bird screen.
   a. Locate the bird screen provided with the boiler.
   b. Cut the bird screen to fit the outside diameter of the 2½-inch PVC inner pipe supplied with the termination kit (inner pipe O.D. is 2⅞ inches).
3. **Partially** assemble the vent termination kit in the sequence shown in Figure 5.
   - DO NOT install the rain cap and bird screen until the assembly has been inserted through the roof and all supports have been installed.
   - Use the following procedures to prepare termination components and cement together.
4. Deburr inside and outside of pipe ends.
5. Chamfer outside of each pipe end to ensure even cement distribution when joining.
6. Clean all pipe ends and fittings. Dry thoroughly.
7. Dry assemble entire vent or air piping to ensure proper fit before assembling any joint.
8. For each joint:
   a. Handle fittings and pipes carefully to prevent contamination of surfaces.
   b. Apply primer liberally to both joint surfaces — pipe end and fitting socket.
   c. While primer is still damp, lightly apply approved cement to both surfaces in a uniform coating.
   d. Apply a second coat to both surfaces. Avoid using too much cement on sockets to prevent cement buildup inside.
   e. With cement still wet, insert pipe into fitting, twisting ¼ turn. Make sure pipe is fully inserted.
   f. Wipe excess cement from joint. Check joint to be sure a smooth bead of cement shows around the entire joint.

Figure 4 Concentric vent termination assembly (DO NOT alter vent components)

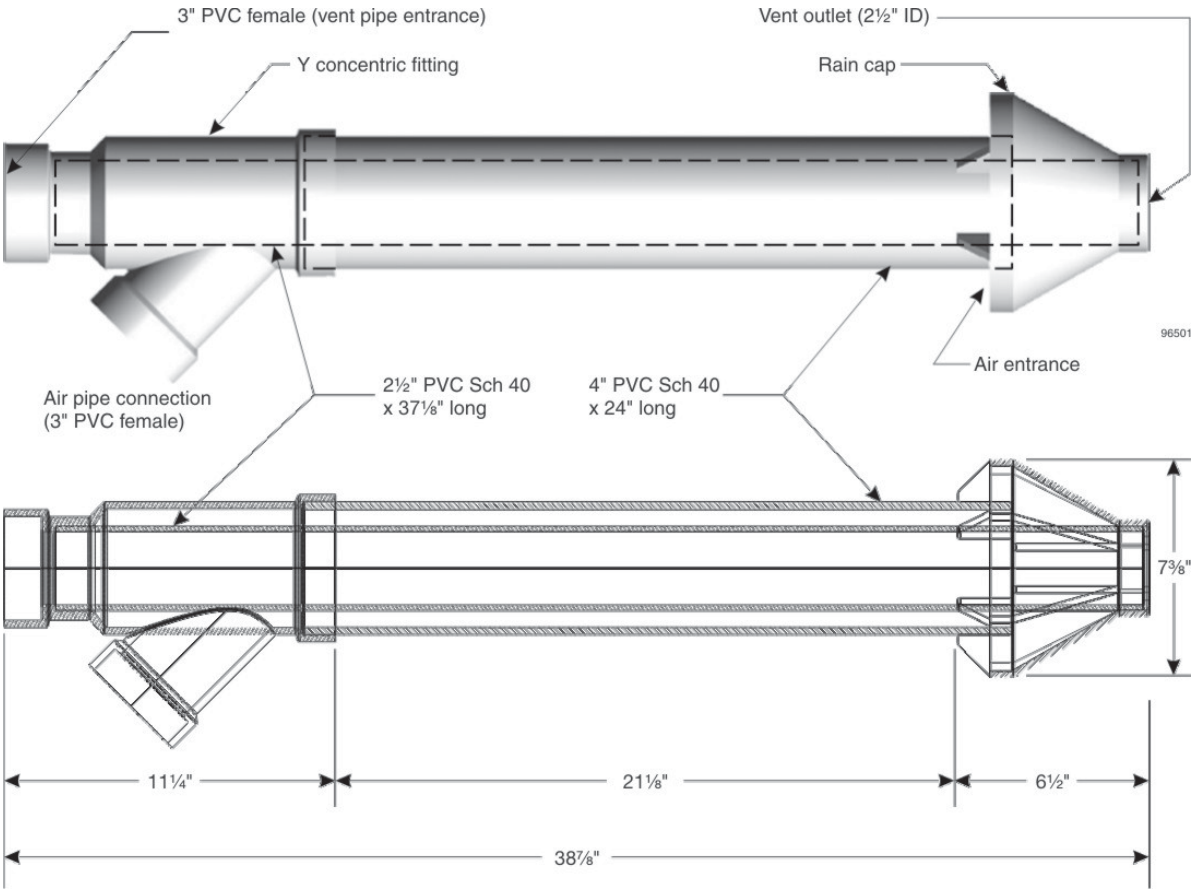

4 Assembling concentric vent/air kit *(continued)*

Figure 5 Concentric vent termination assembly DO NOT alter vent components. DO NOT attach the rain cap until the termination has been inserted through the roof and all supports have been installed.

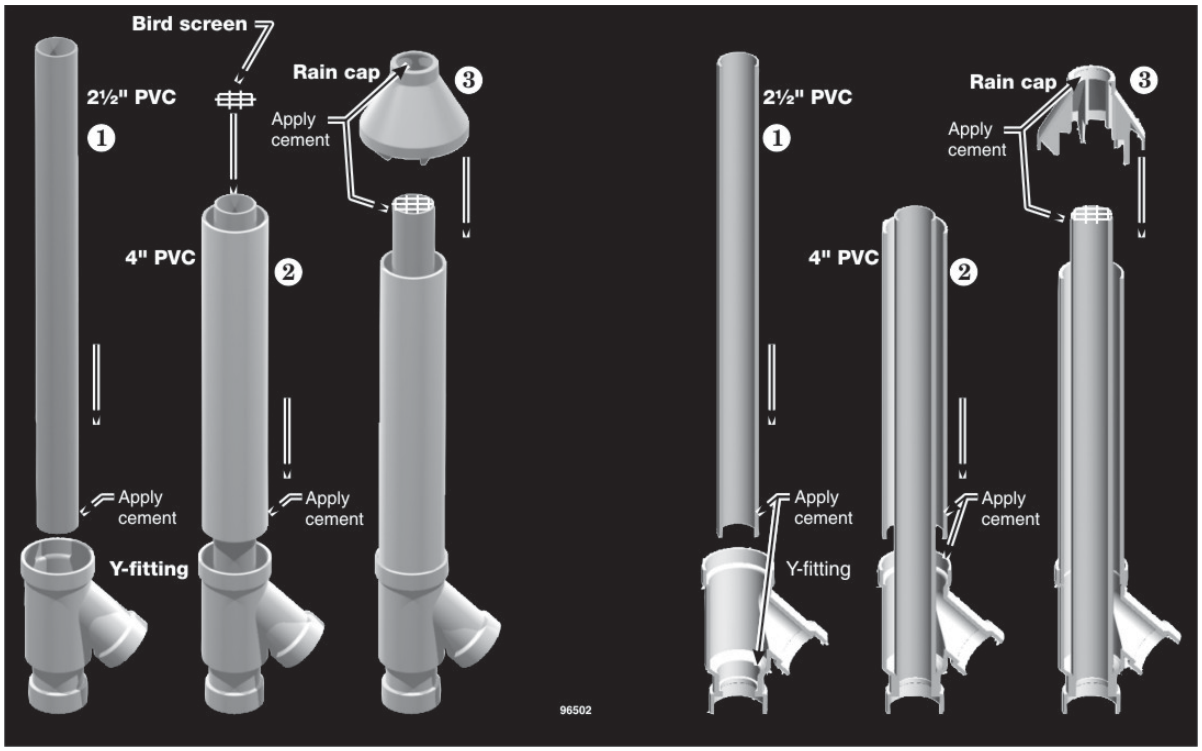

WARNING Do not cut or alter any concentric vent termination component. And ensure all joints are secure and completely sealed. Failure to comply could result in severe personal injury, death or substantial property damage.

5 Installing vent & air piping

NOTICE Installation must comply with local requirements and with the National Fuel Gas Code, ANSI Z223.1 for U.S. installations or CSA B149.1 or B149.2 for Canadian installations.

Mount concentric termination

1. Before beginning vent and air piping from boiler, mount and secure the concentric termination as shown in Figure 2, page 7.
2. When inserting the partially-assembled termination kit through the roof penetration, wrap plastic or other protection over the end of the exposed assembly to prevent debris from entering the pipes.
3. After the assembly has been positioned in the roof opening and all supports have been attached, install the bird screen and rain cap as follows:
   - Place the bird screen on the end of the inner pipe as in Figure 5, page 9.
   - Cement the rain cap in place as shown.

Inserting/securing vent or air pipe into boiler adapters

1. Clean and chamfer insertion end of pipe. Deburr inside of insertion end. Clean and deburr inside and outside of other end of pipe.

WARNING The pipe end must be smooth and chamfered to prevent possible damage to sealing gasket in vent or air pipe adapter. Failure to comply could result in leakage, causing possible severe personal injury or death.

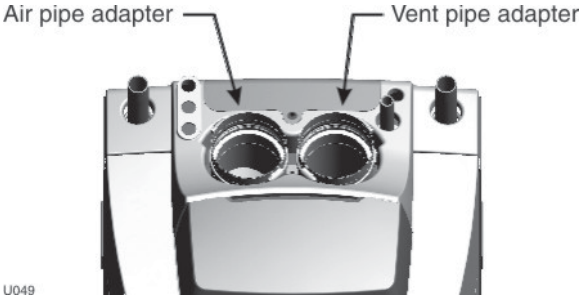

2. Inspect vent or air adapter (above) — verify no obstructions or foreign objects inside.
3. Loosen clamp screw.
4. Measure 3½ inches from end of pipe and make a mark with felt-tip pen.
5. Loosen adapter clamp screw.
6. Apply small amount of silicon grease to end of pipe to ease insertion.
7. Insert pipe into adapter.
8. Slide pipe down until the 3½-inch mark is reached.

WARNING Do not apply excessive force or bend the adapter or flue/air pipe when inserting. The adapter or seal could be damaged.

9. Secure vent or air pipe by tightening the adapter clamp securely. Do not overtighten. The seal is accomplished with the internal gasket. The clamp is only to hold the pipe in place.

Installing vent or air piping

For reference in following see Figure 9, page 11.

1. Work from the boiler to the concentric vent/air termination. Do not exceed the lengths given in Table 2, page 11, for either the air or vent piping.
   a. Note that the Ultra-230 may be installed with either 3-inch or 4-inch vent and air piping. Table 2 provides shorter allowable piping lengths when using 3-inch piping. Reduce the vent and air pipe size at the connection to the termination fitting using reducing couplings.
2. Cut pipe to required lengths.
3. Deburr inside and outside of pipe ends.
4. Chamfer outside of each pipe end to ensure even cement distribution when joining.
5. Clean all pipe ends and fittings. Dry thoroughly.
6. Dry assemble entire vent or air piping to ensure proper fit before assembling any joint.
7. For each joint:
   a. Handle fittings and pipes carefully to prevent contamination of surfaces.
   b. Apply primer liberally to both joint surfaces — pipe end and fitting socket.
   c. While primer is still damp, lightly apply approved cement to both surfaces in a uniform coating.
   d. Apply a second coat to both surfaces. Avoid using too much cement on sockets to prevent cement buildup inside.
   e. With cement still wet, insert pipe into fitting, twisting ¼ turn. Make sure pipe is fully inserted.
   f. Wipe excess cement from joint. Check joint to be sure a smooth bead of cement shows around the entire joint.
8. Install perforated metal pipe supports or equivalent as shown in Figure 9, page 11.
9. Slope vent and air piping continuously toward boiler, with at least ¼ inch drop per foot of run. Do not allow sags at any point.
10. Maintain minimum clearance of 0.2 inch between vent pipe and any combustible wall or material. Seal wall or floor penetration openings following local code requirements.

5 Installing vent & air piping *(continued)*

WARNING Do not insulate vent piping. Exception: Where vent pipes pass through unheated spaces, such as crawl spaces or unheated garages, apply ½ inch fiberglass insulation to the portion of the vent pipe in the unheated space only.

NOTICE When a large number of elbows is needed with 3-inch piping, use long radius elbows to reduce pressure drop. This allows a longer run of piping. See Table 2 notes for details.

Figure 9 Vent/air piping installation

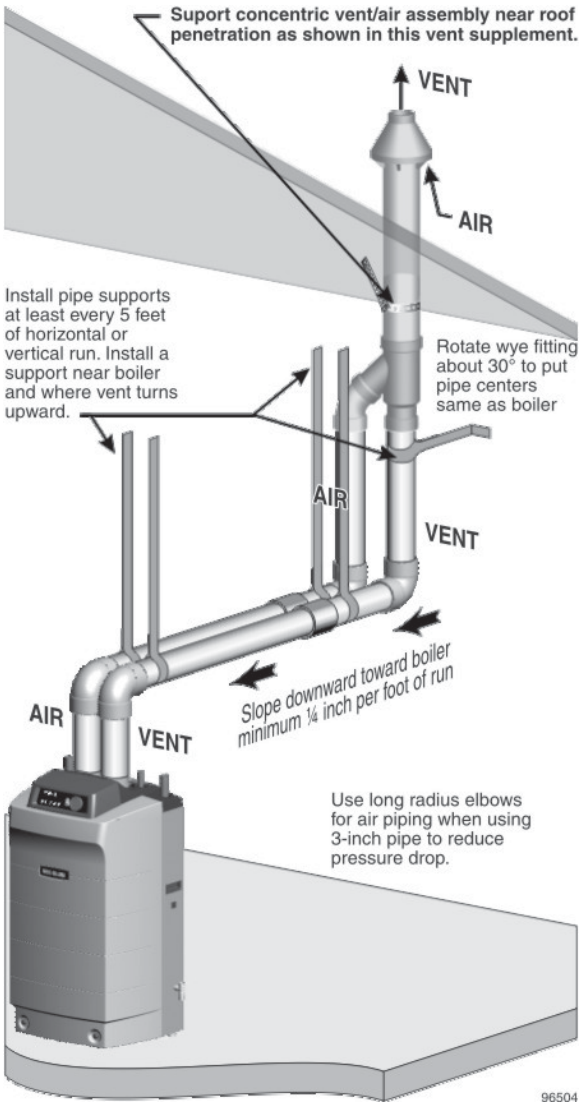

~~Table 2~~ ~~Min/max lengths of either air piping or vent piping~~

Vent & air piping limits
(when using concentric vent/air termination)

Boiler Ultra –	Minimum Piping		Maximum Piping, 3"		Maximum Piping, 4"	
	Feet	Elbows *	Feet	Elbows	Feet	Elbows *
80	2		100		NOT APPLICABLE	
105	2	1	100	1		
155	2	1		1		
230	2	1	30 **	1	70	1

* You do not have to [illegible] the 45-degree elbow [illegible]ed for the air piping connection to the c[illegible]tric vent termination as[illegible]ly.

** Use 4"x3" r[illegible]ng couplings when connecting th[illegible]ch vent and air piping to th[illegible]centric termination assembly. You do n[illegible]e to deduct from ma[illegible]n piping lengths for these reducers.

For p[illegible] using more than 1 elbow, reduce maximum allowab[illegible]th:
[illegible]eet for each additional 4-inch elbow
7 feet for each additional 3-inch long radius elbow
• 16 feet for each 3-inch short radius elbow.

Table replaced by addendum see next page

Figure 9a Alternate piping arrangement using (3) 45° street ells for closer pipe centers

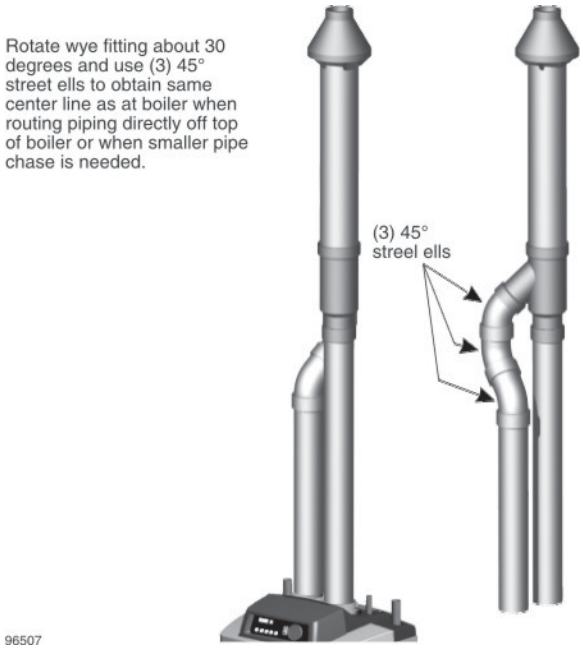

WEIL-McLAIN Ultra

Ultra Gas-fired water boiler

Vent Supplement

Concentric vent/air system: Through-roof termination

(Weil-McLain kit part number 383-500-350)

[All piping (air and vent) must be PVC only]

Addendum

This Addendum replaces table 2, page 11 in the "Ultra Vent Supplement" (Part number 550-141-965/0703).

Table 2 Min/max lengths of either air piping or vent piping

Vent & air piping limits (when using concentric vent/air termination)						
Boiler Ultra –	Minimum Piping		Maximum Piping, 3"		Maximum Piping, 4"	
	Feet	Elbows [1,4]	Feet	Elbows [1,4]	Feet	Elbows [1,4]
80	2	1	100	1	NOT APPLICABLE	
105	2	1	100	1		
155	2	1	100	1		
230	2	1	30	1	70 [2]	1
310 [3]	2	1	NOT APPLICABLE		50 [2]	1

1 You do not have to count the 45-degree elbow used for the air piping connection to the concentric vent termination assembly.

2 Use 4"x3" reducing couplings when connecting the 4-inch vent and air piping to the concentric termination assembly. You do not have to deduct from maximum piping lengths for these reducers.

3 Ultra-310 uses only 4" piping

4 For piping using more than 1 elbow, reduce maximum allowable length:
- 7 feet for each additional 4-inch elbow
- 7 feet for each additional 3-inch ***long radius*** elbow
- 16 feet for each 3-inch ***short radius*** elbow.

WARNING This document must only be used by a qualified heating installer/service technician. Read all instructions, including this Supplement and the Boiler Manual, before installing. Perform steps in the order given. Failure to comply could result in severe personal injury, death or substantial property damage.

NOTICE Installation must comply with local requirements and with the National Fuel Gas Code, ANSI Z223.1 for U.S. installations or CSA B149.1 or B149.2 for Canadian installations.

WEIL-McLAIN

Weil-McLain
500 Blaine Street
Michigan City, IN 46360-2388
http://www.weil-mclain.com